fluxxLED

Installation Instructions
CR Flood light

Product information

The Novii CR Flood light is a flood light available in five wattages and can be surface mounted or pole mounted to suit most projects.

Installation steps

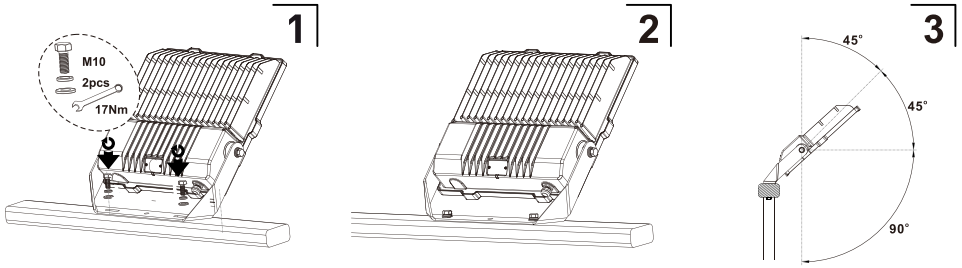

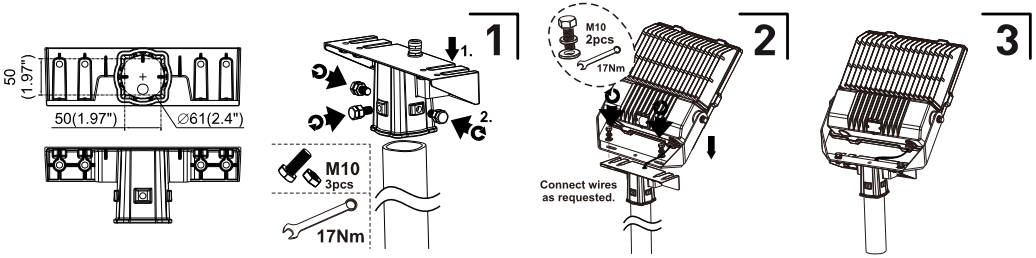

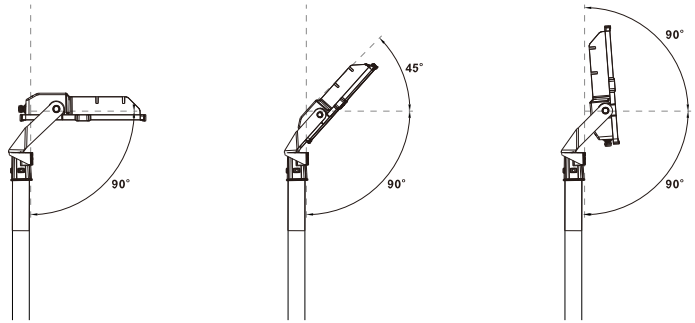

L	brown
N	blue
⏚ GND	yellow/green

Dimmable

DIM+ / DA1	blue	brown	purple	white
DIM- / DA2	white	blue	gray	black

Technical specifications

Model	Dimension	Weight	Power (W)	PF	CCT (K)	IP	Voltage	Control
F3-CRF50	300 x 240 x 69	2.1 kg	50W	>0.9	2700-6500K	IP66	AC220-240V 50-60Hz	Non-dim 1-10V DALI Photocell
F3-CRF100	335 x 295 x 71	3.4 kg	100W	>0.93				
F3-CRF150	375 x 320 x 75	4.5 kg	150W					
F3-CRF200	400 x 345 x 78	5.5 kg	200W					
F3-CRF300	464 x 410 x 83	8.3 kg	300W					

Note : Please check batten label to see if fitting is dimmable and if so which type of dimming.

Regulations

To ensure correct functionality and safety please read instructions carefully before using this product. This luminaire complies with AS/NZS 60598.1, AS/NZS 60598.2.5

All wiring and installation of this luminaire must adhere to local and national wiring rules eg AS/NZS 3000:2007 Amendment 2:2012 Electrical Installation

TIPS

1. Always ensure power is off and the fitting has cooled down before performing any maintenance or adjustment to the fitting

2. To avoid injury or damage to the fitting, ensure that power leads and screws are secure before connecting the power

3. Handle the fitting with care to avoid breakage
4. Find a suitable location away from liquids or hazards
5. To clean, wipe with a damp clean cloth. Never soak the fitting with water.

fluxxLED

Installation Instructions
CR Flood light

Pole Clamp Bracket installation

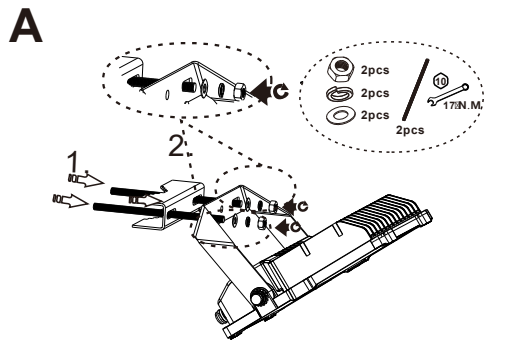

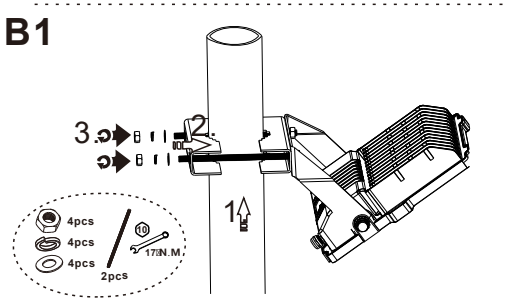

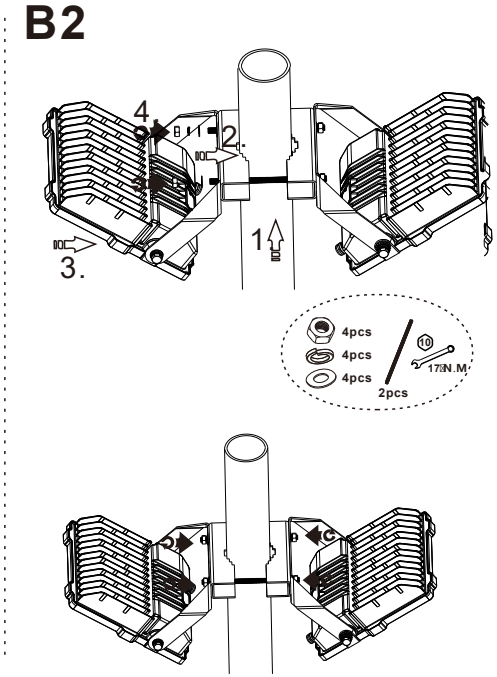

F3-CRFCB1
(40-100mm pole)

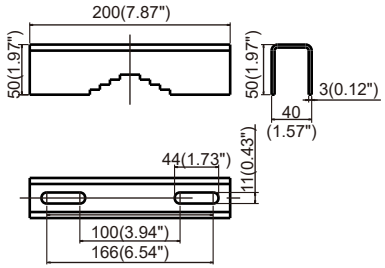

F3-CRFCB2
(40-150mm pole)

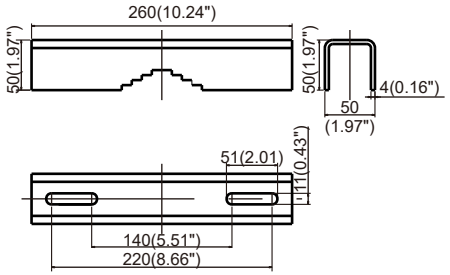

Luminaire Size	Bracket	Accessory SKU	Compatible pole size	
			min Dia	max Dia
50/100/150/200W	small	F3-CRFCB1	40mm	100mm
200/300W	big	F3-CRFCB2	40mm	150mm