MOLTO LUCE®
Austria, 4600 Wels, Europastraße 45, T: +43 7242 698-0, M: office@moltoluce.com

# Montageanleitung / Mounting Instruction

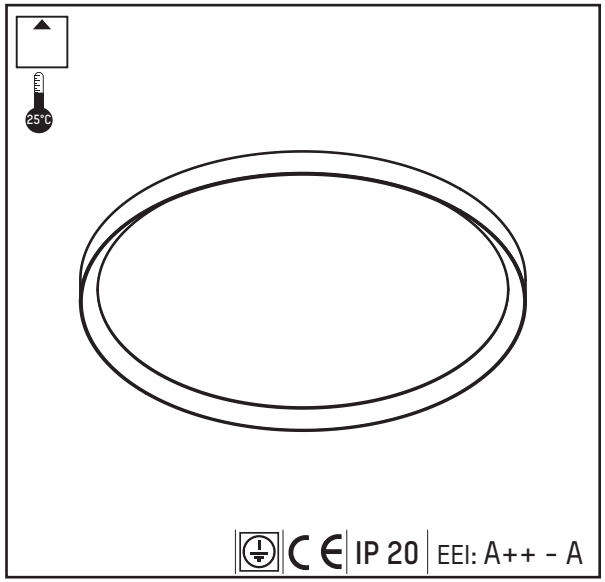


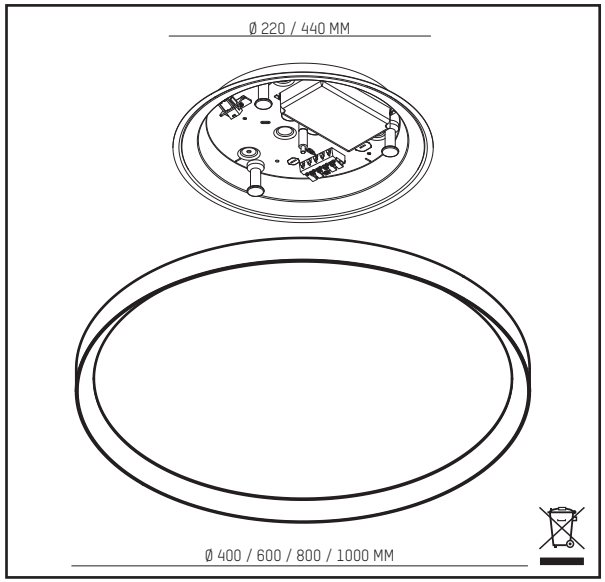


## BINA ROUND SURFACE

1

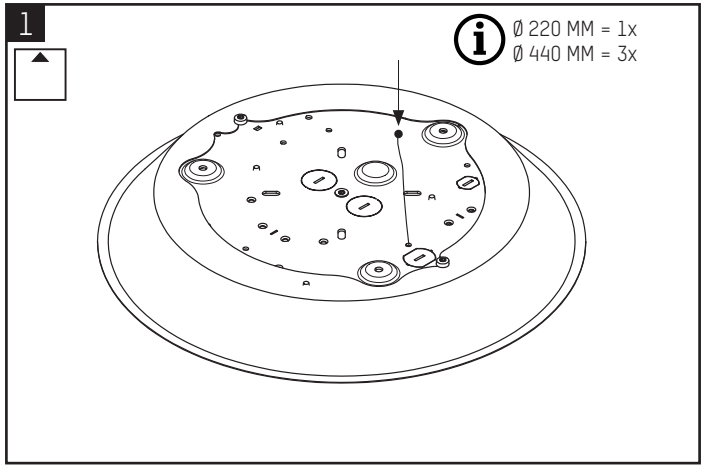


2

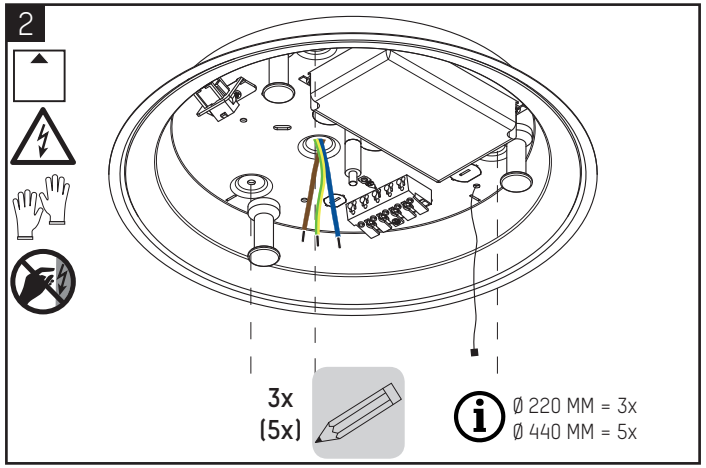


3

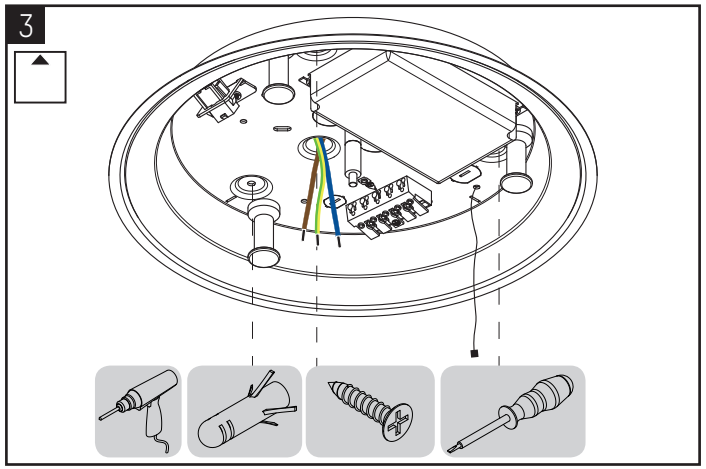

4

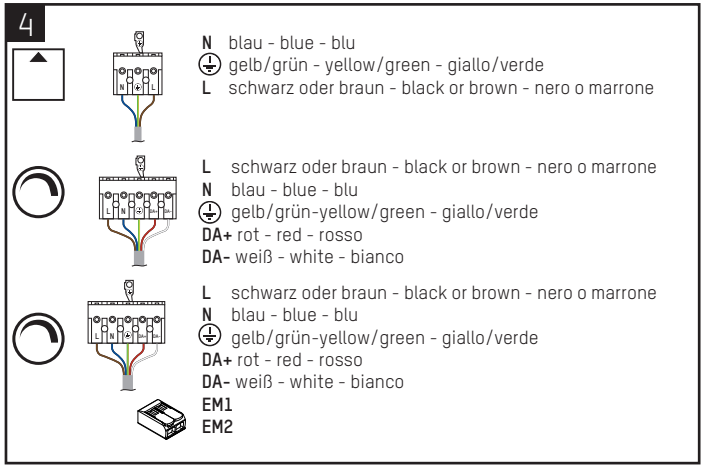


5

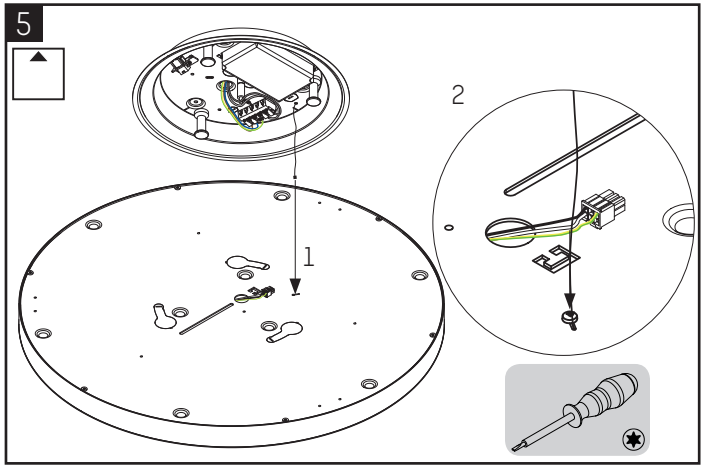


6

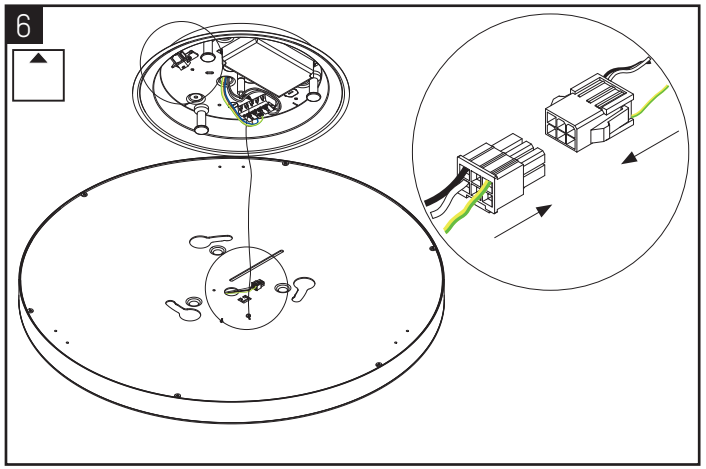

7

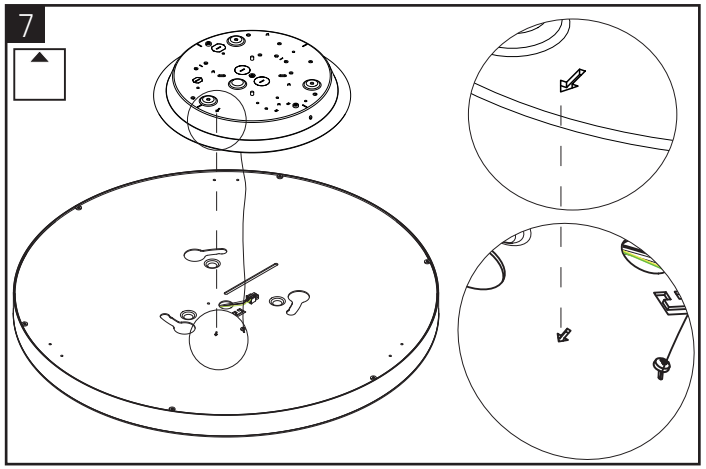

10

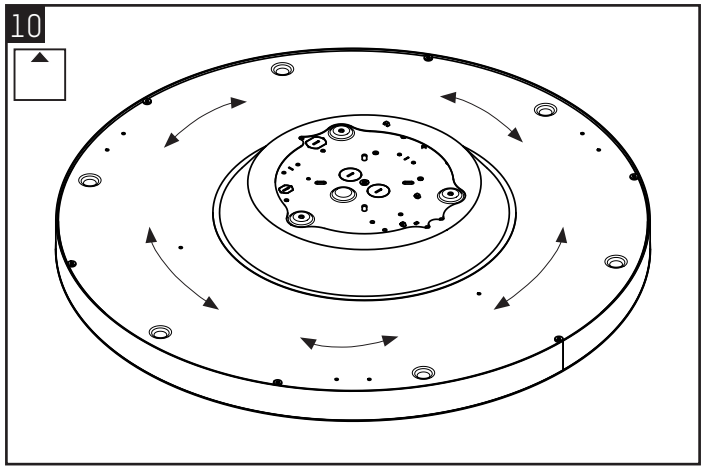

13

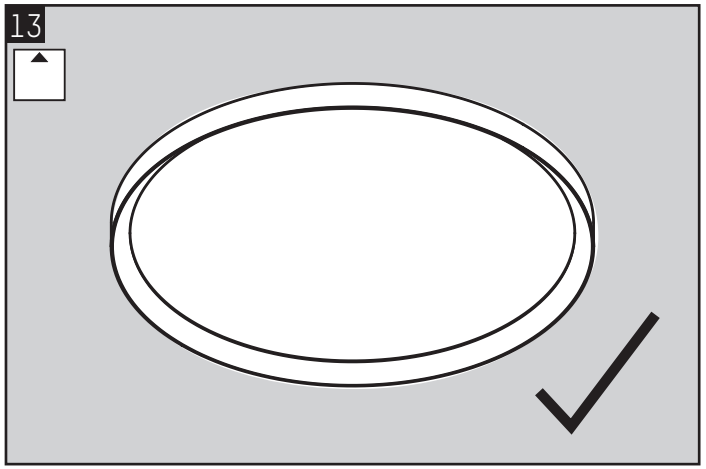

8

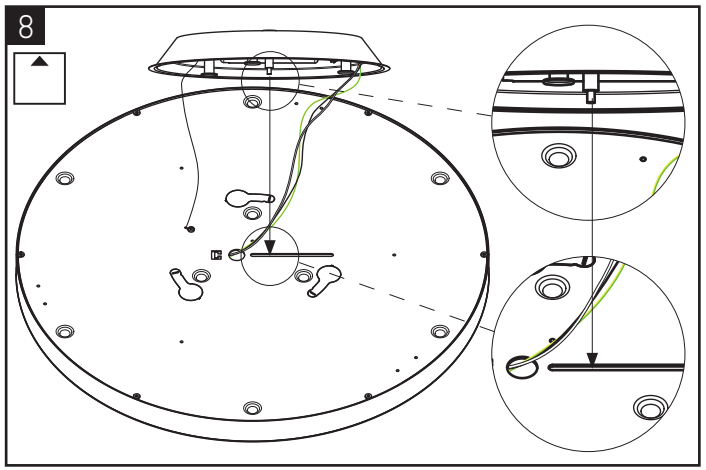

11

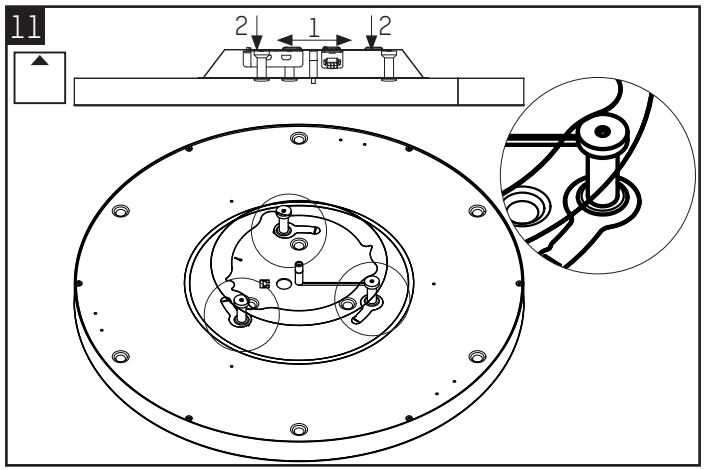


9

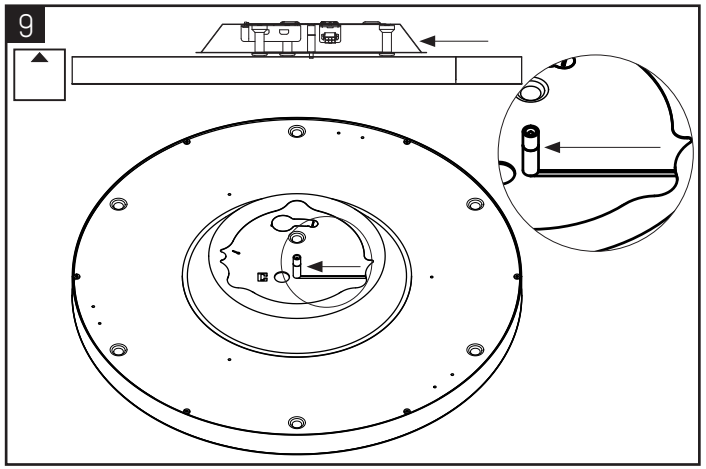
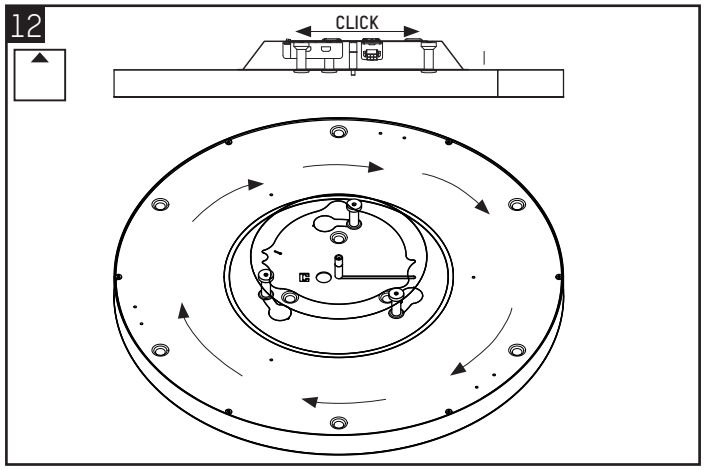
12